Initials:_____

BME 105: Genetics in the Genomics Era
Winter 2018: Final

Name: _____

Student ID:_____

Before starting, write your initials on the top of each page.

You can use the back-side of the pages for scratch, but we will not grade answers written on the back-side of the page.

Section	**Points**
Part I: One- or two-word answers, True/False, matching	/36
Part II: Multiple choice	/28
Part III: Short answer	/26
Part IV: Extended calculation	/60
Total Points	**/150**

Second Letter

1st letter	U		C		A		G		3rd letter
U	UUU UUC UUA UUG	Phe Leu	UCU UCC UCA UCG	Ser	UAU UAC UAA UAG	Tyr Stop Stop	UGU UGC UGA UGG	Cys Stop Trp	U C A G
C	CUU CUC CUA CUG	Leu	CCU CCC CCA CCG	Pro	CAU CAC CAA CAG	His Gln	CGU CGC CGA CGG	Arg	U C A G
A	AUU AUC AUA AUG	Ile Met	ACU ACC ACA ACG	Thr	AAU AAC AAA AAG	Asn Lys	AGU AGC AGA AGG	Ser Arg	U C A G
G	GUU GUC GUA GUG	Val	GCU GCC GCA GCG	Ala	GAU GAC GAA GAG	Asp Glu	GGU GGC GGA GGG	Gly	U C A G

Initials:_____

Part I: One- or two-word answers, T/F, and matching

1. Choose the best matching phrase in the right column for each of the terms in the left column.

Term	**Matching number**	Phrase
a. fitness		1. chance fluctuations in allele frequency
b. gene pool		2. p=1.0
c. allele frequencies		3. ability to survive and reproduce
d. genetic drift		4. p and q
e. fixation		5. collection of alleles carried by all members of a population

In the space provided next to each definition, clearly write the appropriate term.

2. _____ a gene interaction in which the effects of alleles at one gene hide the effects of alleles at another gene

3. _____ a type of mutation that blocks the activity of wild-type alleles of the same gene, causing a loss of function in heterozygotes.

4. _____ genes or loci that control the expression of continuous traits
5. _____ a cross between individuals both heterozygous for two genes

6. _____ the two identical copies of a chromosome that exist immediately after DNA replication.

7. _____ a cheap and high-throughput method to genotype and individual at ~1-2 million genetic markers

8. _____ the number of chromosomes in a gamete of potato. Potato is tetraploid and somatic cells have 4 copies of 12 homologous chromosomes for a total of 48 chromosomes.

9. _____ cis-acting element that regulates transcription from a nearby promoter

10. _____ an allele that prevents the birth or survival of homozygotes, though heterozygotes carrying the allele survive.

For the following statements, circle True or False.

11. You have two, true-breeding mutant strains of petunia with white flowers. Each of these strains contains a single, recessive mutation. If you cross these strains and the progeny are white (mutant color), then the mutations are alleles of the same gene.

    True **False**

12. The 7-Methyl G cap at the 5' end of eukaryotic mRNAs is important for the initiation of transcription.

    True **False**

13. An XXXY human would be male.

    True **False**

14. The following population is at Hardy-Weinberg equilibrium where the genotype frequencies are: AA 0.46, Aa 0.5, aa 0.04.

    True **False**

Part II: Multiple choice (circle your answer. If there is more than one correct answer, circle all correct answers)

15. Deletions and duplication are most often caused by
    a. ultraviolet light
    b. chemical damage
    c. Unequal crossing over
    d. Spontaneous errors in DNA replication

16. What are possible outcomes following DNA cleavage by Cas9? Mark all that apply.
    a. Disruption of a gene
    b. Repair of DNA cleavage
    c. Deletion of a chromosome
    d. Disruption of more than one gene

17. In a dihybrid cross *AAbb* x *aaBB*, what proportion of the F_2 offspring is expected to be homozygotic for at least one gene?

    a. ¼
    b. ½
    c. ¾
    d. All are homozygotes
    e. None are homozygotes

18. The proportion of individuals in a population that are of a particular genotype is the
    a. phenotype frequency
    b. genotype frequency
    c. allele frequency.
    d. None of the choices is correct.

19. What is Cas9 and what does it do?
    a. an RNA molecule that binds to target DNA via complementary base pairing
    b. a DNA molecule that binds to target DNA via complementary base pairing
    c. a viral protein that cuts RNA molecules
    d. a protein enzyme that cuts both strands of DNA at sites specified by an RNA guide

20. If you wanted to make a mouse model for the following genetic condition, indicate which of the following types of mice would be useful to your studies.

    Genetic condition: Marfan syndrome (a dominant disease caused by haploinsufficiency for the *FBN1* gene)

    a. Transgenic mouse overexpressing a normal mouse protein
    b. Transgenic mouse expressing normal amounts of a mutant protein
    c. Transgenic mouse expressing a dominant negative form of a protein
    d. A knockout mouse
    e. A conditional knockout mouse
    f. A knockin mouse in which the normal allele is replaced with a mutant allele that is a least partially functional

21. If you wanted to make a mouse model for the following genetic condition, indicate which of the following types of mice would be useful to your studies.

    Genetic condition: A cancer mutation in the promoter of the *TERT* gene that is associated with overexpression of *TERT*

    a. Transgenic mouse overexpressing a normal mouse protein
    b. Transgenic mouse expressing normal amounts of a mutant protein
    c. Transgenic mouse expressing a dominant negative form of a protein
    d. A knockout mouse
    e. A conditional knockout mouse
    f. A knockin mouse in which the normal allele is replaced with a mutant allele that is a least partially functional

22. A certain disease is caused by homozygosity of the *g* allele (*G* is the corresponding wild-type allele). However, the penetrance of the disease is 75%. Two individuals known to be heterozygotes have a child. What is the probability that the child exhibits the disease?
    a. 1/4
    b. 3/4
    c. 1/8
    d. 3/16
    e. 9/16

23. What does this diagram represent?

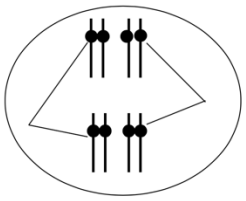

    a. Mitosis
    b. Meiosis I
    c. Meiosis II
    d. None

24. You wish to amplify the region in **BOLD CAPS** below using PCR. Select the correct set of primers. Assume, for the purposes of this question, that an octamer primer is sufficient. (Usually, primers 18-20 nucleotides in length are required).

    5'gagatcaggactta**GATTACAGATTACAGATTACAGATTACA**ggccaagtc3'

    a. 5'AGGACTTA3' and 5'GGCCAAGT3'
    b. 5'TAAGTCCT3' and 5'ACTTGGCC3'
    c. 5'AGGACTTA3' and 5'ACTTGGCC3'
    d. 5'AGGACTTA3' and 5'TGAACCGG3'
    e. none of the above

25. What are the four major classes of chromosomal rearrangements?
    a. Inversions, duplications, translocations, deletions
    b. Duplications, reciprocal translocations, non-reciprocal translocations, inversions
    c. Deletions, inversions, duplications, reciprocal translocations
    d. Translocations, pericentric inversions, paracentric inversions, deletions

26. In humans, brachydactyly is a dominant condition; 6,400 people in a population of 10,000 show the disease (1,600 are BB, 4,800 are Bb) and 3,600 are normal phenotypes (bb). The frequency of the b allele is

    a. 0.6
    b. 0.4
    c. 0.36
    d. 0.48
    e. 0.16

27. The phenotypic ratio 9:3:4 may indicate

    a. complete dominance
    b. codominance
    c. epistasis
    d. recessive lethal

28. How would you expect an increase in molecular marker density to affect QTL mapping studies?
    a. Genes affecting quantitative traits can be directly identified.
    b. Segments of the genome which control quantitative traits can be more quickly identified.
    c. QTLs will be smaller segments of the genome than those identified in previous studies.
    d. None of these

Part III: Short answer

29. Indicate which of the four major classes of rearrangements are most likely to be associated with each phenomenon below. In each case, briefly explain why. Assume the organism is diploid and rearranged chromosomes are rare such that the organism is heterozygous for the rearrangement.

    a. Semi-sterility

b. Lethality

c. Haploinsufficiency

d. Hypermorphic mutation

30. The following sequence of DNA from the genome contains a hypothetical, very short protein. Only one strand of the DNA sequence is given.

5′ -TTCCCCTATCGAGGGTCTT**CTA**CGAGGCCCC**CAT**CACTAAAGCTTG- 3′

a. What is the full amino acid sequence of the short polypeptide?

b. You would like to use CRISPR/Cas9 to create a knockout of this polypeptide to investigate its function. This requires the design of an sgRNA. The crRNA portion of the sgRNA is typically 20nt long; however, for the purposes of this question, assume you can target with only a 6nt sequence. Give one possible 6nt crRNA sequence that would be used to potentially knockout this gene?

c. After your targeted cut, DNA repair through NHEJ resulted in the insertion of 1bp (a G nucleotide) at the site of cleavage. Write out the new resulting sequence with this 1bp insertion of a G.

d. What type of mutation was introduced to the gene with the 1bp insertion? If it is a protein coding mutation, indicate whether it is a nonsense, missense, silent, or frameshift mutation.

31. To understand the genetic basis of cancer, many researchers sequence the DNA of tumor samples. As a researcher, you perform whole-genome sequencing of a patient with lung cancer and start to analyze the resulting data using GATK. For a particular SNP with the alleles A and G, you notice there are 100 reads supporting the A allele, but 1,000 reads supporting the G allele. GATK did not filter out this variant, so you don't think it is a PCR artifact. How can this be?

32. What evidence supports the hypothesis that humans originated in Africa?

33. In rats, the allele for pigmentation (*P*) is dominant to the allele for albinism (*p*). The gene for black pigmentation (*B*) is dominant to the gene for cream pigmentation (*b*). If the dominant *P* allele is absent, gene *B* is inoperative.

    a. Predict the genotypes and phenotypes of the F1 progeny of a cross between a homozygous black rat and an albino homozygous for cream.

    b. Predict the phenotypic ratio of the F2 progeny of a parental cross between a homozygous black rat and an albino homozygous for cream.

    c. This is an example of what type of epistasis: dominant or recessive?

Part IV: Extended calculations (show your work for partial credit, show pedigrees and genotypes, punnett squares, etc.)

34. Assume in Santa Cruz island, there lives a large population of golden-mantled ground squirrels. The coat color phenotype is controlled by a single gene with two alleles, the dominant B allele for grey fur and the recessive b allele for black squirrels. In the current generation about 60% of the squirrels on the island are grey.

    Because foxes can spot black squirrels easily, black squirrels have 30% the survival and reproductive rate of grey squirrels. Predict the frequency of black squirrels in the next generation.

Parental Gametes

Allele	R	r
Frequency	p	q

First Generation Offspring

Genotypes	RR	Rr	rr
Zygote frequency	p^2	$2pq$	q^2
Relative fitness	W_{RR}	W_{Rr}	W_{rr}
Relative frequency after selection	p^2W_{RR}	$2pqW_{Rr}$	q^2W_{rr}
Normalized adult frequency	$\frac{p^2W_{RR}}{\overline{W}}$	$\frac{2pqW_{Rr}}{\overline{W}}$	$\frac{q^2W_{rr}}{\overline{W}}$

Gametes from First Generation

Allele	R	r
Frequency	$p' = \frac{(p^2W_{RR} + pqW_{Rr})}{\overline{W}}$	$q' = \frac{(q^2W_{rr} + pqW_{Rr})}{\overline{W}}$

Normalization factor $\overline{W} = p^2W_{RR} + 2pqW_{Rr} + q^2W_{rr}$

35. You conduct a case-control study comparing the frequency of 10 SNPs among individuals who have developed high cholesterol level as compared with control individuals of a similar age who show no sign of this condition. Here's a report for SNP ID_3423:

	Cases	Control
A	60	30
T	200	50

Is SNP ID_3423 significantly associated with the risk of high cholesterol? Please include the chi square statistical value and the degree of freedom for this study.

Percentage Points of the Chi-Square Distribution

Degrees of Freedom	Probability of a larger value of x^2								
	0.99	0.95	0.90	0.75	0.50	0.25	0.10	0.05	0.01
1	0.000	0.004	0.016	0.102	0.455	1.32	2.71	3.84	6.63
2	0.020	0.103	0.211	0.575	1.386	2.77	4.61	5.99	9.21
3	0.115	0.352	0.584	1.212	2.366	4.11	6.25	7.81	11.34
4	0.297	0.711	1.064	1.923	3.357	5.39	7.78	9.49	13.28

36. The male I-2 in the accompanying pedigree is affected with Huntington disease (HD), a type of neuromuscular degeneration caused by a rare autosomal dominant mutation H with complete penetrance. The wildtype, non-mutant allele is denoted h. The woman II-1 is also affected. Genotyping of a locus linked to the Huntington locus was performed using a restriction enzyme, where different allele sequences contain different restriction enzyme recognition sites. The alleles A and a yielding the bands in the gel are linked to the Huntington locus with a recombination frequency of 10 cM.

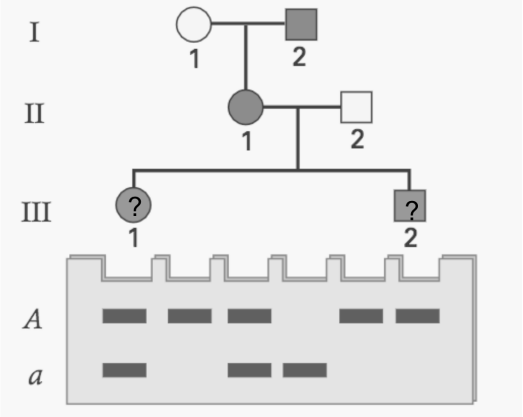

Given the pattern of bands in the gel,
(a) what is the probability that III-1 will be affected?
(b)What is the probability that III-2 will be affected?

37. A SNP located in a hair follicle enhancer of the human *KITLG* gene is associated with the difference between blond and dark hair. People with blond hair have a high probability of having the A allele, while dark-haired people tend to have the G allele of the SNP.

    a. The information given does not prove that the A allele of the SNP causes blond hair. Explain.

    b. The hair follicle enhancer DNA sequences of the human and mouse *KITLG* genes are extremely similar; the mouse enhancer normally has the G allele of the SNP. Design a knockin experiment in mice that could test whether or not the SNP allele associated with blondness in human actually contributes to the blond hair phenotype. **Diagram any construct you would use to set up your experiment.** Assume that the A and G alleles are incompletely dominant. There are many ways to perform this experiment, so be detailed as possible.

    For your mouse experiment please state:
    i) what DNA construct, RNA construct, and/or protein you would introduce into the mouse cells. You may draw pictures. Indicate any selectable markers on DNA or RNA that you may introduce.
    ii) whether you would put the DNA into fertilized eggs or ES cells
    iii) if introducing DNA, where in the mouse genome does the DNA integrate
    iv) whether creating the mouse should involve the generation of a chimera or not
    v) which additional breeding steps you would do to make the mouse or mice you wanted
    vi) two possible phenotypic results you could get from the newly made mice, and the corresponding conclusions you would make about the hair follicle enhancer SNP based on each result

Initials:_____

Extra Credit Survey (1 point): Extra credit will be given for completing the following survey, regardless of the opinion. Your opinions will help shape the future versions of this course and will not affect your grade on the final or your overall grade.

1. Which topic(s) would you like to see covered more in-depth?

2. Do you suggest any changes to the format of the course? e.g. more lecture, less lecture, more problem sets, integrate more computational analysis like the UCSC Genome Browser or

3. Other comments/suggestions you were not able to include in your official course evaluation?